Keenan SYSTEM

Better Farming – Better Food

OPERATORS MANUAL

Models; FP 80 FP 100 FP 115 FP 140 FP170 FP 200

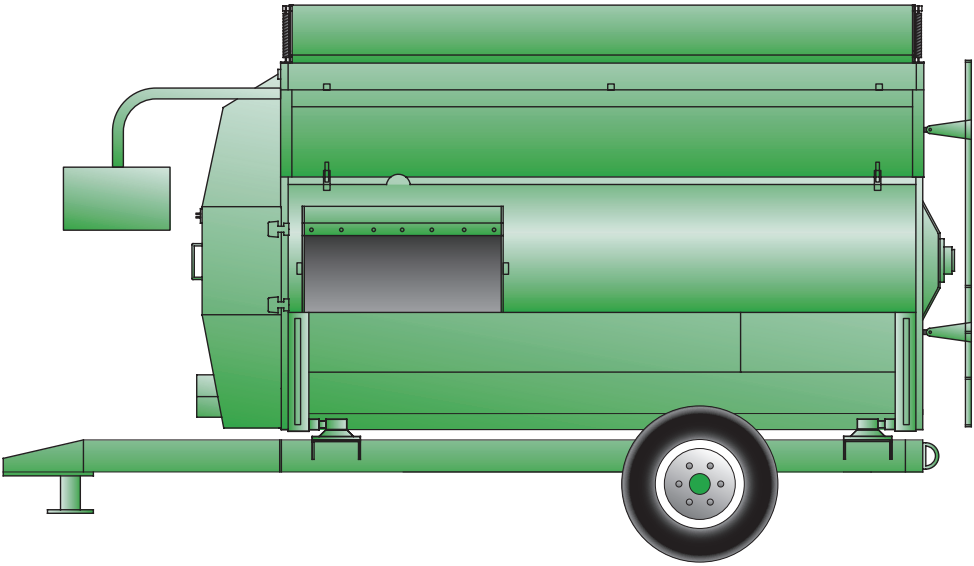

D3D.FPOK3-EN/0601

PROCEDURE FOR COMMISSIONING THE KEENAN KLASSIK

To The Owner

The Keenan Klassik is a TMR feeder with a difference.

Not only does it share the unique attributes of the original low horse power, market leading Keenan mixer wagon, such as fast efficient mixing and feed out, pre-mixing concentrates and grain processing capabilities, the Klassik can also handle baled silage/hay, straw and other fibrous materials, and wash and slice root crops such as fodder beet, potatoes and carrots. Extra features include; lowered loading side and variable feedout control.

The minimum of moving parts in the Klassik means high mechanical efficiency.

As a Keenan owner you are assured of our prompt attention to any problems at all times.

The Klassik is a highly robust and efficient piece of equipment and simple routine maintenance and correct operation will ensure you get many years of use from it.

This manual has been designed to cover all the information you need to know to operate and look after the machine, but if you require any further assistance, please do not hesitate to get in touch with us. Telephone numbers can be found on the back cover of this manual.

Contents

1	Keenan Klassik operating procedures	2
2	The Keenan Klassik Principle	3
3	Safety	5
4	How to use the weighing system	7
5	Operating the Klassik	10
6	Example mixing sequences	15
7	Maintenance	21
8	Maintenance checklist	27
9	Warning signs	29
10	Standard Specifications	30
11	Part numbers	32
12	Troubleshooting	38
13	Warranty	39
	E.C. Declaration of conformity	40

1 Keenan Klassik Operating Procedures

The basic operation of the Klassik can be summarised as follows;

Hitching up Ensure that all connection points, cables, hydraulic hoses etc. are securely fastened and that the hitch is properly located in the drawbar eye.

The weighing system Zero the display before use and follow instructions as per manual .

Loading & Mixing Close Feedout door before loading. Engine speed for mixing should be 1500-1800 r.p.m. Load the ingredients in the sequence recommended by the Keenan system specialist. Allow sufficient time for the machine to chop longer materials and place baled forage material in sections slowly into the machine. Do not overload the machine or load it too quickly at any stage of the mix. **Machine performance will be seriously affected by overloading and warranty may be voided upon evidence of same.** Follow recommended procedures contained within this manual and consult your TMR specialist if you have any questions.

Feeding Out Engine speed for feeding out 1400 to 1600 r.p.m. Allow the TMR to loosen for 15-20 secs open the VFC door partially for about 10 secs. When feed is seen discharging from the machine then lower door fully and drive slowly along feedout passage.

Maintenance Machine needs to be maintained according to instructions in maintenance section of this manual. **Regular maintenance of the machine is essential both for long machine life and to comply with Warranty regulations.**

Safety Always observe proper safety procedures when working with machine. Read carefully Section 3 on safety before attempting to operate machine.

A properly maintained Keenan mixer will give years of trouble free operation.

Weekly cleaning of machine is also advised as this will prevent corrosion to the mixer body over time if old feed is left lying for long.

See inside for further details on each section. If you have any further questions please contact your local Keenan centre for advice.

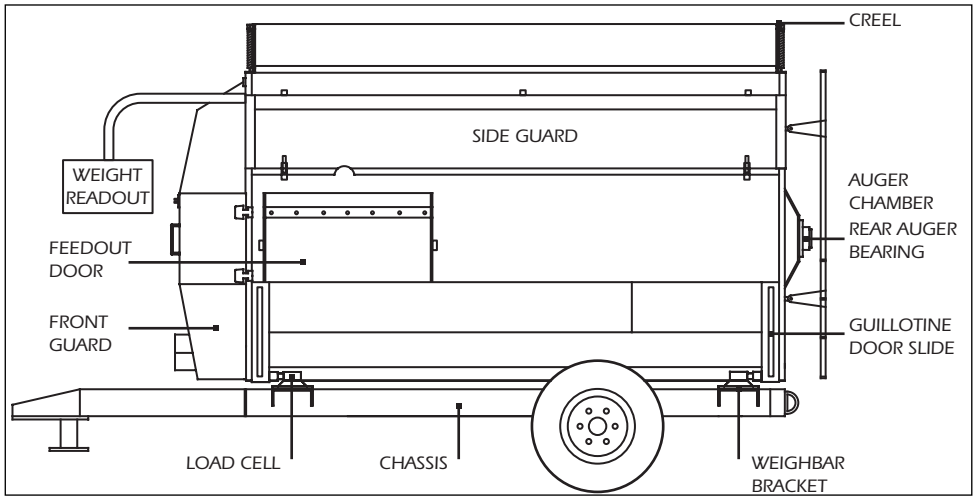

2 The Keenan Klassik Principle

The Klassik's main operating functions are weighing, washing, chopping/mixing and feeding out.

Weighing

The Klassik electronic weighing system allows exactly the required amounts of individual materials to be loaded into the mixing chamber to provide accurate rationing.

The system is based on robust load cells mounted between chassis and mixing chamber which send electronic signals to the readout indicator mounted on the front of the feeder. These signals are converted into units of weight which are then displayed on an easily-read digital display.

Individual loads can be weighed or successive loads can be accumulated to give total weight of feed in the feeder.

Mixing

Mixing is carried out by a centrally-mounted rotor fitted with 4 angled paddles revolving at 5 - 10rpm. (When using a reduction gearbox, rotor speed will reduce accordingly).

The paddle imparts a shearing action, sweeping the feed ingredients onto the strategically placed knives to produce a consistent and thorough mix with all types of materials, including baled silage/hay, straw, roots and liquids. The placement of the blades ensures the materials reach optimum size/length, without grinding it down and destroying the all important 'scratch factor' of the forages.

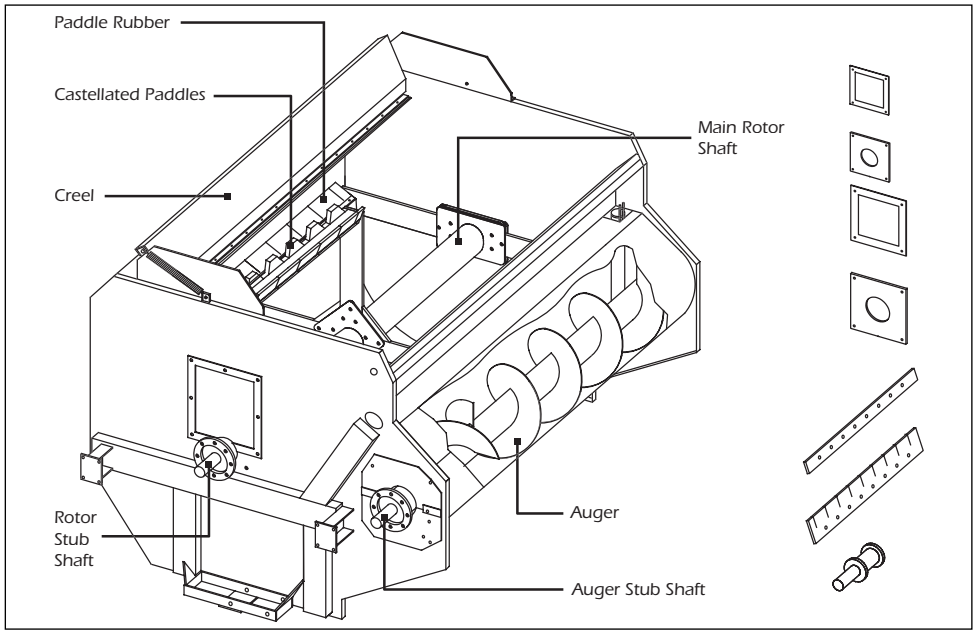

cont'd ....

In machines where the 'beet grid' is fitted, when washing root crops, water is added to the mixer and when the process is completed the 'beet grid' is opened and the water drained away.

Angle shaped paddles help mixing by sweeping the material from end to end. When mixing, a simple guillotine door separates the mixing chamber from the unloading auger.

Feeding Out

When mixing/ chopping is complete, with the PTO engaged drop the guillotine (Variable Feed Control) door partially. The auger rotates in the same direction as the paddles and runs the entire length of the mixing chamber.

As the door is opened the material is swept up by the paddles and pushed onto the auger. As soon as feed is seen discharging then drop the door fully and proceed to move along at a suitable speed to allow mixer wagon to feed out at an even rate.

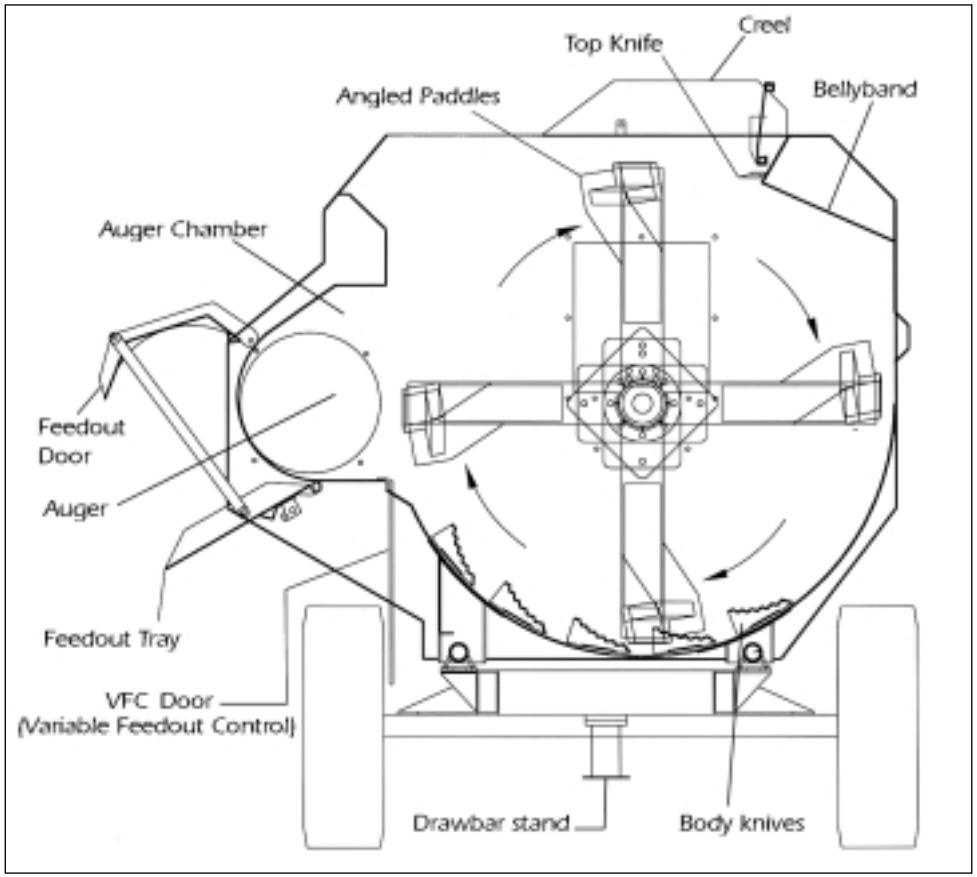

3 Safety

NEVER ENTER A MACHINE WITH BLADES WITHOUT USING THE BLADE COVERS PROVIDED

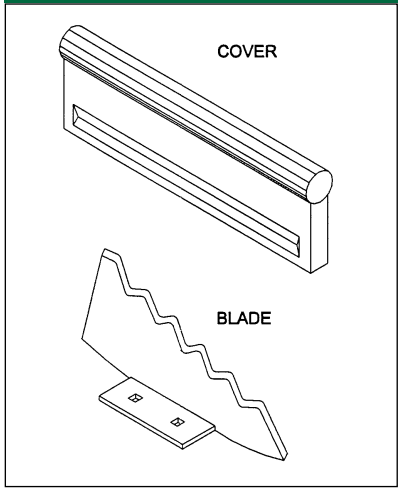

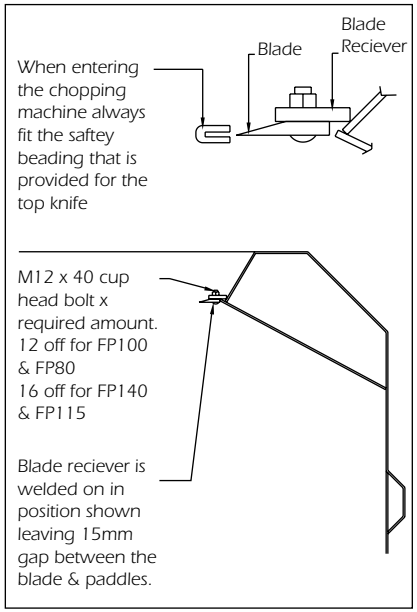

The Klassik has many safety features built into its design but its ultimate safe operation is down to the individual and his understanding of potential safety problems.

The Klassik is designed to be used as a mixer/chopper wagon for mixing animal feeds. It should not be used for any other purpose which will affect its performance or safety.

The following points are guidelines only, please be vigilant at all times.

1 Use only a PTO shaft with a properly fitted safety guard and shear bolt.

2 Do not permit any passengers on the feeder.

3 Always connect the PTO shaft with the shear bolt end to the tractor.

4 Always make sure that all covers/guards are fitted and locked closed with the keys provided.

5 **Keenan does not advise entering the mixing chamber in any circumstances due to the obvious hazards associated with the blades within the mixing chamber.** These blades are made of tungsten carbide on the cutting edges and loss of footing inside the machine could result in a severe cut. Should any routine cleaning be required, this should be carried out using a powerhose, with the beet grid open eliminating any reason to climb into the mixing chamber.

All machines are now provided with blade protectors and it is strongly recommended that no-one enters the machine without these protectors in place.

6 The knife positioned below the creel should always be fitted with the supplied guard before routine cleaning/maintenance is attempted.

7 Ensure all trailing leads, hoses etc are well clear of the PTO.

8 Ensure the feeder and the immediate area surrounding it are clear of people, **especially children**, before commencing operation.

9 **Never remove chain guards or get into the feeder when it is connected to a tractor.**

continued...

10 Regularly inspect all chains (at least weekly), sprockets and moving parts for wear and check all nuts and bolts for tightness.

11 Load only from the side indicated.

12 Do not exceed 15km/hr (10mph) when travelling.

13 Exercise extreme caution when turning right.

14 Always park the feeder on level ground and apply hand brake when not in use.

15 The ladder on the rear of the feeder is only to be used as a viewing point for the mixing chamber. It should **not** be used as a means of access to the mixing chamber nor onto the body of the feeder under any circumstances. **Failure to observe this may cause serious injury.**

SODAGRAIN WARNING!

Before soda treating grain, read carefully the instructions provided by KEENAN paying particular attention to the Safety Warnings.

When finished treating grain, clean out any remaining material in the mixing and/or auger chamber by loading in 200-300 Kg of silage or 50 Kg of straw and unloading in the normal manner.

Caution is the key word at all times!

4 How to use the Weighing System

The weighing system is designed to be simple to operate, accurate and robust.
The weighing system is made up of four load cells and an indicator unit at the front of the machine. Each of the load cells is connected to the indicator unit.
Refer to weighing system manual supplied with your mixer wagon for details on the weighing system. Whatever system is fitted the basic principles remain the same and are as follows.

The system uses 12 volt DC power from the tractor which is connected to the indicator unit. The indicator unit therefore has two leads entering it, one from the load cells and one from the tractor.
The indicator unit is mounted on a swinging arm to allow it to be placed in the best position possible for ease of operation and visibility.
Weights of loads are displayed in kgs or lbs with increments of 5kg/10lb being used. The unit is capable of measuring up to 20 tonnes (44000lb).
The system is maintenance free being fully electronic with no moving parts. All components are sealed against moisture and dust and are resistant to frost and corrosion.

FOR ELECTRONIC READOUT BOX DETAILS ON USAGE, PLEASE REFER TO THE MANUALS SUPPLIED WITH THE BOX

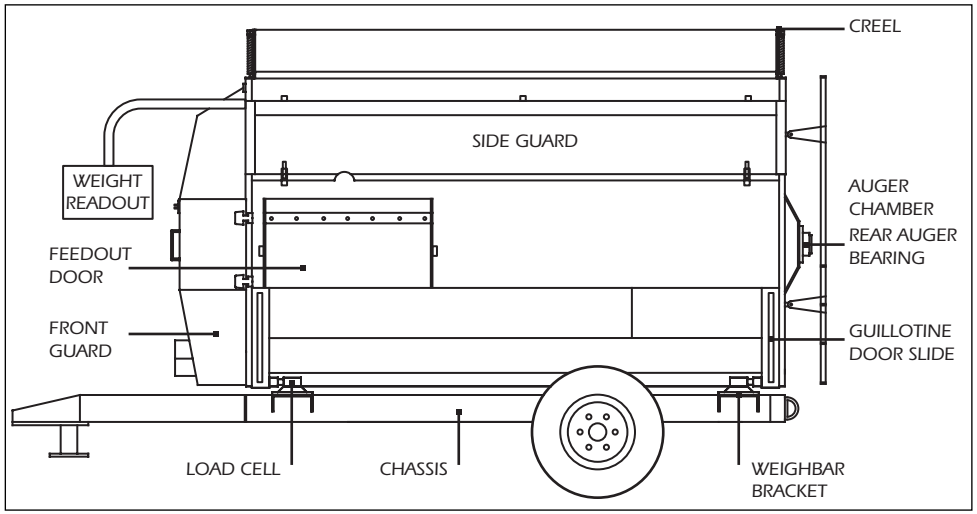

Keenan troubleshooting tips on weighing

If you experience problems in the operation of the Weighing System, read through this Troubleshooting section first before contacting KEENAN SERVICE.

Reading Drifting

If the reading on the Indicator is drifting or does not stay steady, the most likely cause of the problem is dampness/moisture in or around the Indicator or cables. Please follow these steps to locate and correct the problem.

1. Disconnect the Display Cable (Junction Box to Indicator). Check both the plug on the cable and the connector on the Indicator for dampness and/or corrosion of the terminals. If any dampness is found dry it off thoroughly with a hair drier. If corrosion is found on the terminals then clean thoroughly. Reconnect cable and test.
2. Check for any loose wiring or dampness. Again dry off any dampness and rectify any loose or bad wiring.
3. Check Weighcell plugs for dampness and also check Weighcell cables for any breaks and/or dampness.

If the above measures do not rectify the problem then contact KEENAN SERVICE for further assistance.

System Weighing Innaccurately

If you suspect that the system is weighing inaccurately, check all four weighcells to make sure that they are mounted correctly. If the bolt through the weighcell has come loose or broken, the weighcell can turn upside-down resulting in that weighcell giving an inaccurate reading. (As you face the back of the machine the cable should be to the Right Hand Side of each of the rear Weighcells. As you face the front of the machine the cable should be to the Right Hand Side of each of the front Weighcells.) If a Weighcell is turned upside-down, remove the bolt M10 x 90 (for the FP170 & FP200 use M20 x 130) and turn the Weighcell.

To check that the system is weighing correctly, get some known weight (e.g. A bag of fertiliser) and place it on each corner of the machine in turn. You should get the same reading for each corner. If one corner returns a significantly different reading from the other three then this points to a faulty weighcell on that corner.

Indicator will not Switch ON

Check the power cable thoroughly and make certain that you are getting power from the tractor to the display. The fuse for the display is located inside the cabinet but do not disassemble display as to do so may cause serious damage. It is extremely rare for this fuse to be blown so if there is power feeding to the display and it is still not working contact your Keenan service agent. The fuse located at the bottom panel of the indicator is for the external alarm and nothing to do with the display.

5 Operating the Klassik

The simplicity of the Klassik design is reflected in its low power requirement. Depending on the mix used and the amount of chopping necessary together with the dry matters of the ingredients in the mix the power requirements will vary.

If a tractor is at its limit during mixing this will translate into extra strain on moving parts, as there will be surges in power as the engine recovers during certain parts of the mix.

A tractor that has sufficient power will provide a much smoother drive to the mixer-wagon during all stages of operation. When using a planetary/reduction gearbox the power requirements from the tractor will be reduced accordingly.

Set-up

i Ensure machine is level when hitched up.

ii The PTO shaft should be attached with its shear bolt end coupled to the tractor and not to the mixer-wagons drive box. Make sure that the PTO guard is in good condition and well secured.

iii Connect the hydraulic line from the guillotine door mechanism to a double acting spool valve. Connect the line from the brakes to a single acting valve and the line from the wash gate to a double acting valve, using the colour coding as indicated on the front of the machine.

iv Examine the mixing chamber to ensure that;

- All blade covers have been removed
- All spare parts and foreign objects have been removed
- No damage has taken place during transport.

v Fit the weigh-box to the plate on the swinging arm and attach the display cable from the junction box. Ensure the power lead from the weighing system is connected to the tractor battery via a direct fused line or place a 12v battery in the side box and connect the crocodile clips for power. Test by switching on the weigh box, then press the keys 'Net/Gross' followed by 'Zero', to Zero the scales. Stand on the back of the ladder and check the display with your known weight.

vi With the tractor running, check that the VFC door opens fully and closes completely. Similarly check the movement of the feedout tray. Engage the PTO and check the turning of the paddles. Check with the operator that he is happy with the operation of and the connections of the hydraulic lines. The initial turning of the paddle rubbers against the side of the Klassik will generate a lot of initial noise but this will decrease as the paddle rubbers become more pliable.

As a general rule engine speed during loading should be as low as possible without the risk of stalling the tractor. See guidelines on loading and mixing procedures.

Consult your Keenan TMR Specialist / nutritionist regarding machine capacities and follow the advice given.
Never exceed the stated load.
The photograph (below) illustrates a well mixed ration with materials evenly distributed throughout the mix

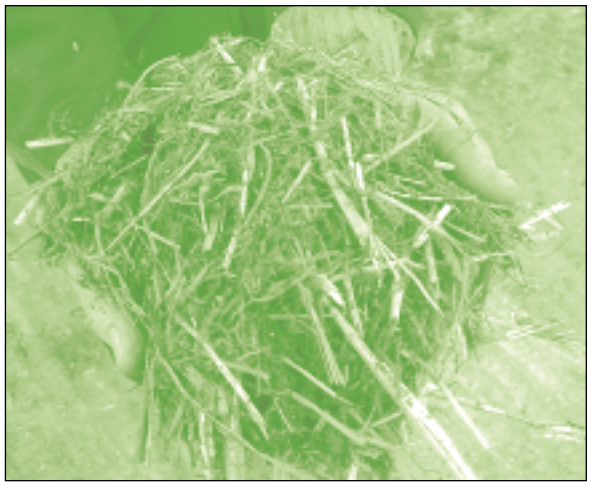

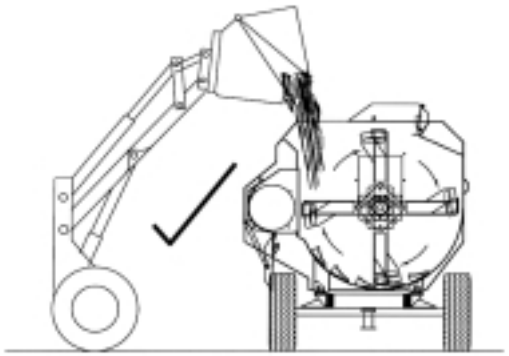

Load long fibres slowly onto paddles

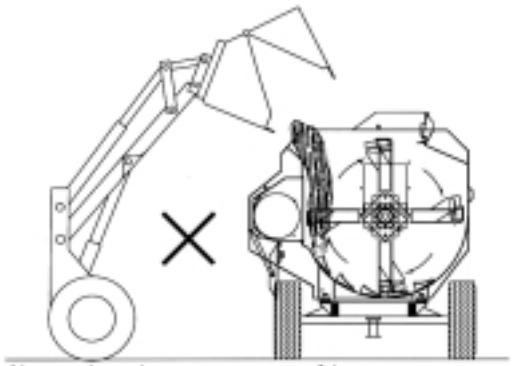

Never drop large amounts of long fibres onto paddles all at once

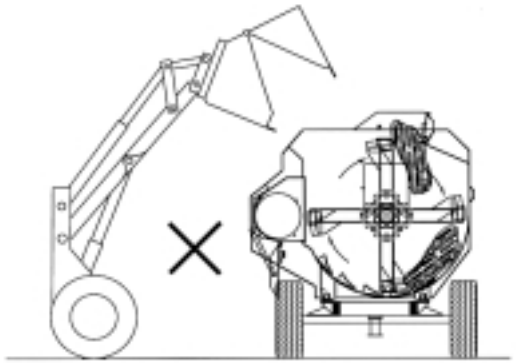

Never drop large amounts of forage into feeder at any time

Loading & mixing

Load material as close as possible to the loading side of the machine i.e. the discharge auger side. Failure to do this, especially when loading large blocks of silage and or sections of round bales will result in drive system overload and probable shear bolt breakage.

The unique tumbling action of the machine is what carries out the mixing procedure. If the machine is overloaded or loaded in the wrong order or insufficient time is allowed for proper chopping, then this tumbling action will not take place and mix quality will suffer.

The engine revs (1500 to 1800 rpm) are set to give (8-10) revs of the paddle per minute. The exceptions to this are:

When large quantities of straw are added, the engine revs (1100 to 1400 rpm) are set to give (6-8) revs of the paddle per minute.

At the initial loading of round bale silage, the engine revs (1100 to 1400 rpm) are set to give (6-8) revs of the paddle per minute. Ensure that the bale is split in to at least 4 sections

During the sodagrain process, the engine revs (1500-1800 rpm) are set to give (8-10) revs of the paddle per minute.

During the premixing of concentrates, the engine revs (1500-1800 rpm) are set to give (8-10) revs of the paddle per minute.

During the washing process, the engine revs (1100 to 1400 rpm) are set to give (6-8) revs of the paddle per minute.

During the chopping process, the engine revs (1800 to 2000 rpm) are set to give (10+) revs of the paddle per minute.

Example Loading and Mixing Sequences

Where possible we advise that you premix the straights to simplify the feeding routine.

Premixing

Where possible we advise that you premix all straights to simplify the feeding routine. Premixing is where the dry concentrate ingredients are mixed together in the Klassik to give up to 7 days supply. The premixing of ingredients has the following benefits:

It speeds up the daily feeding routine

Blends are premixed for up to seven days in advance

Premix blends are made to exact Keenan specifications

It increases the accuracy of the concentrate and mineral and vitamin inclusion rates in the ration.

NEVER DROP VFC DOOR BEFORE ENGAGING PTO - SERIOUS DAMAGE MAY BE CAUSED AS A RESULT OF SUDDEN LOAD BEING PUT ON THE AUGER.

Remember
Always use the lowest gear possible as this will ensure maximum power is delivered to the unloading mechanism.

WARNING

Always disengage the PTO before attempting to turn any corner once the Klassik is hitched up.

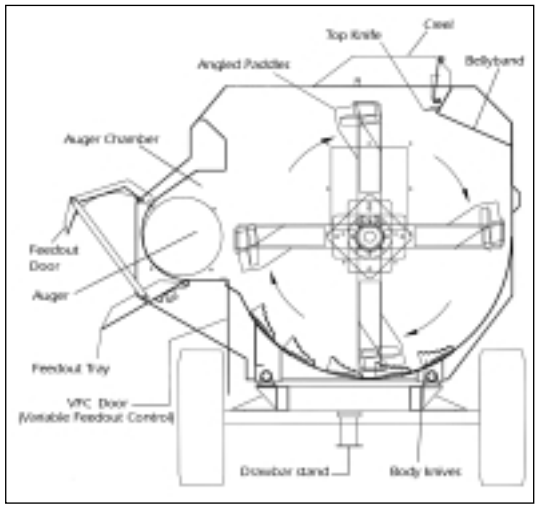

6 General order of Premixing

Ingredients	Order	Paddle revs per minute
Molasses	1	All at 8 - 10 revs
Minerals	2	
Next smallest ingredient by weight	3	
Finish with largest ingredient by weight	4	

Mix the premix for 4-5 minutes after the last ingredient is added.

Fresh weight machine capacities by model (DM in brackets) are;

80	100	115	140	170	200
2.0t (1.7)	3t (2.55)	3t (2.55)	3.8t (3.2)	5t (4.25)	6t (5.1)

Keenan TMR mixing order:

Option 1 Standard Keenan Klassik mix

Ingredients	Order	Paddle revs per minute
Straw	1	All at 8 - 10 revs
Premix	2	
Grass Silage	3	
Maize Silage	4	

Mix the TMR for no more than 1-2 minutes after the last ingredient has been added. The total loading and mixing time for option 1 is 7-10 minutes.

Fresh weight machine capacities by model (DM in brackets) are;

80	100	115	140	170	200
2.5t (0.9)	3t (1.1)	2.75t (1.1)	3.8t (1.5)	5.5t (1.8)	6.5t (2.1)

Option 2 Standard Keenan Klassik mix (where not premixing)

Ingredients	Order	Paddle revs per minute
Molasses	1	All at 8 -10 revs
Minerals	2	
Straw	3	
Soya bean meal	4	
Maize Distillers	5	
Sugar beet pulp	6	
Cereal Grains	7	
Grass Silage	8	
Maize Silage	9	

cont'd

Mix the TMR for no more than 1-2 minutes after the last ingredient has been added. The total loading and mixing time for option 2 is 12-15 minutes.

Fresh weight machine capacities by model (DM in brackets) are;

(option 2)

80	100	115	140	170	200
2.5t (0.9)	3t (1.1)	2.75t (1.1)	3.8t (1.5)	5.5t (1.8)	6.5t (2.1)

Option 3 Standard Keenan Klassik mix with washed and chopped root crops

Ingredients	Order	Paddle revs per minute
Fodder beet/potatoes	1	Static
Water to wash beet	2	static
Washing	3	6-8
Chopping	4	10+
Straw	5	6-8
Premix	6	8-10
Grass Silage	7	8-10

Mix the TMR for no more than 1-2 minutes after the last ingredient has been added. The total loading and mixing time for option 3 is 18-25 minutes.
To speed up the washing and chopping process root crops may be pre-chopped and stored for 1-2 days during the winter.

Fresh weight machine capacities by model (DM in brackets) are;

80	100	115	140	170	200
2.8t (1.0)	3.2t (1.2)	3.0t (1.2)	4.4t (1.6)	6.5t (2.2)	8t (2.7)

Option 4 Keenan Klassik Buffer mix (To supplement grazing)

Ingredients	Order	Paddle revs per minute
Molasses	1	Static
Water (optional)	2	Static
Straw	3	6 - 8
Premix	4	10-12

Mix the TMR for no more than 5-6 minutes after the last ingredient has been added. The total loading and mixing time for option 4 is 12-15 minutes.

Fresh weight machine capacities by model (DM in brackets) are;

80	100	115	140	170	200
1.1t (0.5)	1.5t (0.8)	1.35t (0.7)	2.1t (0.9)	3.0t (1.3)	3.6t (1.6)

Option 5 Keenan Dry cow mix

Ingredients	Order	Paddle revs per minute
Minerals	1	6 - 8
Straw	2	6 - 8
Silage	3	8-10

Mix the TMR for no more than 3-5 minutes after the last ingredient has been added. The total loading and mixing time for option 5 is 8-10 minutes.

Fresh weight machine capacities by model (DM in brackets) are;

80	100	115	140	170	200
1.6t (0.5)	2.4t (0.8)	2.2t (0.7)	2.7t (0.9)	3.6t (1.3)	4.5t (1.6)

Option 6 Standard Keenan Klassik mix (Based on big bale)

Ingredients	Order	Paddle revs per minute
Straw	1	6-8
Add 25 % of the total Grass Silage	2	6-8
Premix	3	8-10
Add remainder of grass Silage	4	8-10

Mix the TMR for no more than 10 minutes after the last ingredient has been added. The total loading and mixing time for option 6 is 20-25 minutes.

Fresh weight machine capacities by model (DM in brackets) are;

80	100	115	140	170	200
2.0t (0.8)	2.5t (1.0)	2.25t (0.9)	3.1t (1.3)	4.5t (1.7)	5.0t (2.0)

Note: Similarly where large volumes of straw are being added, first add the minerals and protein blend, all the straw and then 25% of the total silage requirement. Allow time for straw to chop and mix and then add the balance of the silage.
To ensure the most efficient mixing and chopping times make sure that all blades are maintained properly.

Mixer Wagon Capacity

Due to the diversity of the materials available for feed purposes and the Klassiks ability to incorporate a wide range of feed types into the ration the capacity of the machine will vary.

Overloading should be avoided because:

- The mix will not be homogenous (evenly mixed)
- Mechanical failure may ensue i.e. the breaking of shearbolts, stretching of tension springs and at the extremes the breaking of chains etc.

The overall amount of material that can be chopped/mixed in one load depends on the following; (see table 1.)

- Machine size
- Overall dry matter of the TMR
- The chop length and quality of the material added
- The loading procedure, the loading order of the materials used will have a major effect on the machines capacity e.g. the addition of straw first or last.
- Tractor H.P rating.

The Addition of Bale Silage, Hay & Straw

The effectiveness and speed of chop is determined by;

a The number of effective (sharp and intact) blades in the Klassik
b The dry matter of the material to be added
c The amount of pre chopping of material
d The loading sequence
e The total amount of material to be chopped
f The density of the bale

A Adding Round Bale Silage:

1 Remove all twine, wrap or polythene from the bales
2 Bales should be split or broken up in to a minimum of four pieces
3 If straw is to be added this is done first (run Klassik at 6-8 revs)
4 Add the first bale of silage (6-8 revs)
5 Add the concentrate next (8-10 revs)
6 Add remainder of baled silage and other forages (8-10 revs)

If the splitting of the bale is not possible then use a front grab or forks to break the bale into at least 4 pieces.

When adding square bale silage apply the same principles as outlined and load the bale in small pieces.

B Round Bale Straw:

From the system perspective wheaten straw is the forage of choice. Square bales large and small are much easier to incorporate accurately. For the chopping of wheaten, barley, oaten, rye and triticale straw the following procedures are followed.

1 Straw is always added first
2 A proportion of the wet forage is added next. (usually about 25%) Allow time for all material to chop.
3 Add mineral and vitamin mix next
4 Concentrates are then added if required
5 All remaining forages are then added
6 If greater proportions of straw are to be added as in buffer rations then water is added at the rate of three parts water to one part straw

Round bale hay is treated similarly

Washing and Chopping Root Crops

With the machine stopped add the root material to be washed and chopped. Ensure that there are no stones or foreign objects hidden in the roots.

Add water at approximately 300kg (650 pounds) per tonne of material to be chopped. Rotate the machine for 1-2 minutes at 6-8 revs.

Park the machine on an incline, open the wash gate and allow the water to drain off.

It may be necessary to repeat No 2 if materials being chopped are particularly dirty.

Allow the materials to be chopped by running the machine at 10+ revs

If small quantities of material are to be washed and chopped best results are obtained by washing and chopping sufficient material to supply two days feed.

Feeding Out

When you are ready to feed out:

Ensure that the VFC door is still closed.

Re-engage the tractor PTO with an engine speed of 1,400 to 1,600 RPM and allow the TMR to loosen and tumble for 15-20 seconds.

Open the VFC door partially for about 10 seconds. As soon as the TMR is seen on the feedout tray, open the guillotine door slowly.

Select a ground speed to feed out at an even rate along the feed area.

When feed out is complete, close the guillotine door and always disengage the PTO before attempting to make right turns away from the shed.

Following these guidelines will allow problem free loading, mixing and feeding out.

7 Maintenance

The Klassik has been designed for optimum performance with a minimum of maintenance.
Chains and bearings have been kept to a minimum without compromising function and there are only eleven grease points on the entire machine. All components are of high quality and provide excellent durability.
Regular routine maintenance will ensure your FP gives you the best results with a minimum of problems.
Prior to carrying out any maintenance on the machine, always disconnect the P.T.O. and hydraulic hoses from the tractor. Oserve safety precautions at all times when working on machine, read Section 3 on safety before attempting to work on machine.

Chains

1 Each week check the chains and adjust tension accordingly. Primary drive chain is adjusted by turning the drive gearbox adjuster nut (A) to remove excess slackness and tension by turning chain tensioning jockey arm (B). Secondary drive chain is adjusted by turning the jockey arm (C). Both chains should be adjusted to prevent sagging or whipping when under load. Do not overtighten or damage to the bearings will result.

2 **Each week apply universal oil, not grease, liberally to both drive chains.** Grease is unsuitable for this application, due to it's heavy viscosity it does not lubricate all the vital parts of the chain.

Model	80	100	115	140	170	200
Primary Drive chain	ASA 100	ASA 100	ASA 100	ASA 100	ASA 120	ASA 120
Links	53.5	59	53.5	59	59.5	59.5
Pitch (mm)	31.75	31.75	31.75	31.75	38.1	38.1
Pitch (inches)	1.25	1.25	1.25	1.25	1.5	1.5
Chain Length (mm)	3397.25	3746.5	3397.25	3746.5	4533.9	4533.9
Chain Length (inch)	133.75	147.5	133.75	147.5	178.5	178.5
Secondary Drive Chain	ASA 140	ASA 140	ASA 140	ASA 140	ASA 160	ASA 160
Links	53	57.5	53	57.5	59.5	59.5
Pitch (mm)	44.45	44.45	44.45	44.45	50.8	50.8
Pitch (inches)	1.75	1.75	1.75	1.75	2	2
Chain Length (mm)	4711.7	5111.75	4711.7	5111.75	6045.2	6045.2
Chain Length (inch)	185.5	201.25	185.5	201.25	238	238

3 After each season remove both chains by removing the joiner links - see diagram - and wash off all dirt and oil using paraffin. Dry the chains before soaking overnight in oil. Refit.

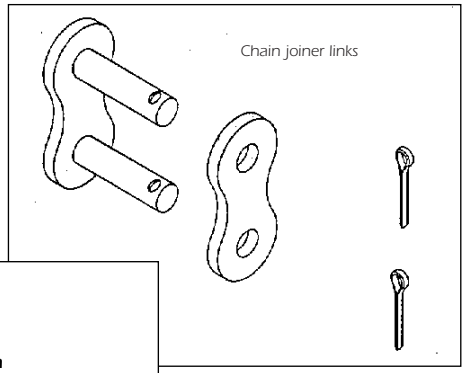

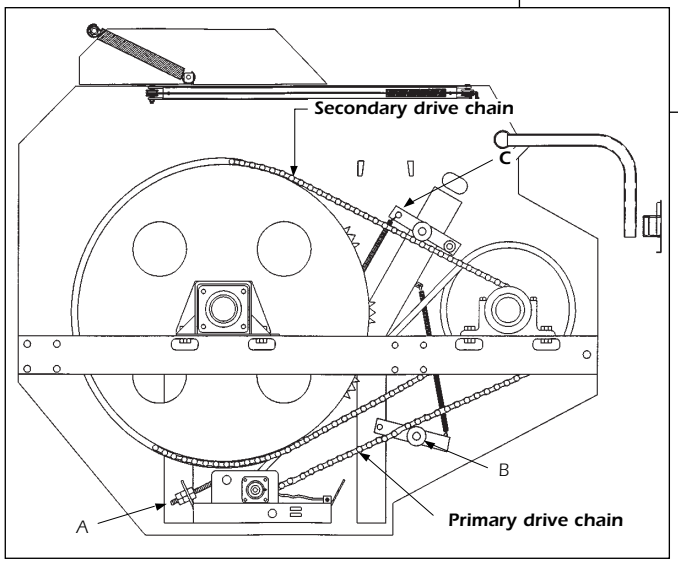

Grease Points 1 Bearings - Each week apply grease to the five bearings with nipples. The five bearings are as follows;
Two main bearings at the rear of the Keenan FP (A + B)

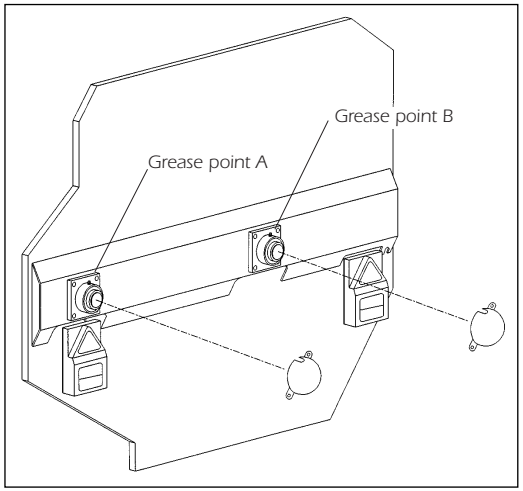

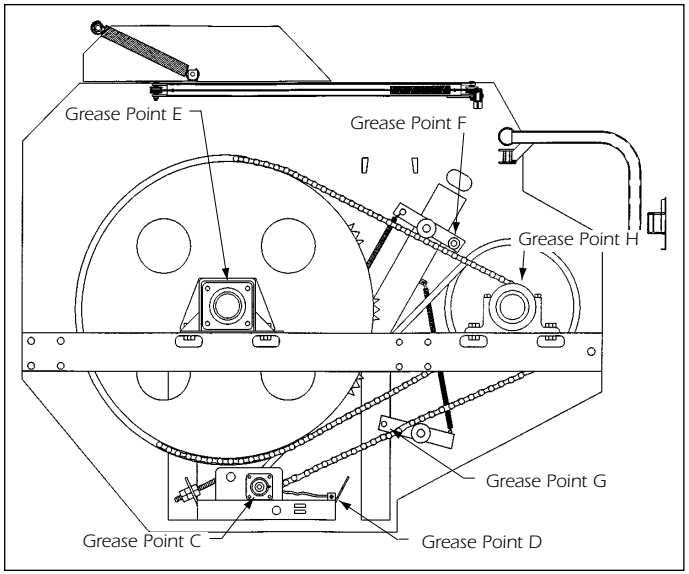

Two main bearings on the front and rear of the gearbox drive shaft (C + D)
One bearing on the front of the main rotor shaft (E)

2
Each week apply grease to all points with grease nipples. The points are as follows;
2 bushes on the jockey sprockets (F & G),
4 bushes on the guillotine door lifting rams.
4 on the tandem axle (2 on each side) if fitted. 4 on the elevator arms, if fitted.

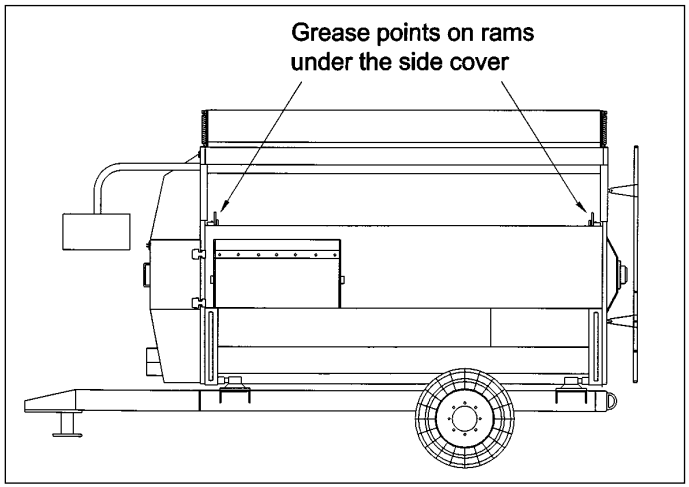

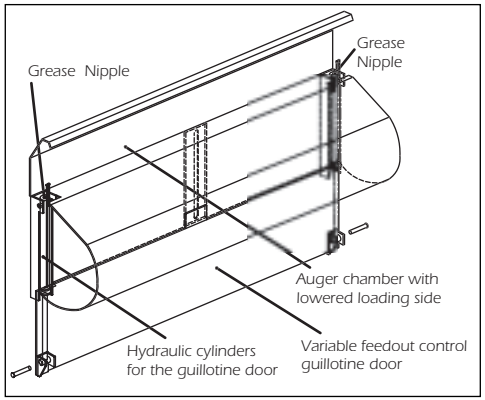

3

Front auger bearing - each year remove top cover and pack with grease. (H)

Note: Check the guillotine door is able to move freely each day and grease as appropriate.

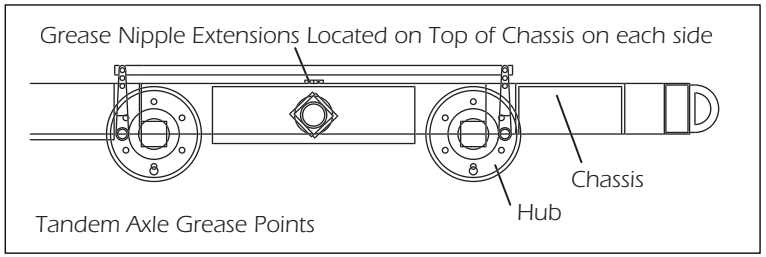

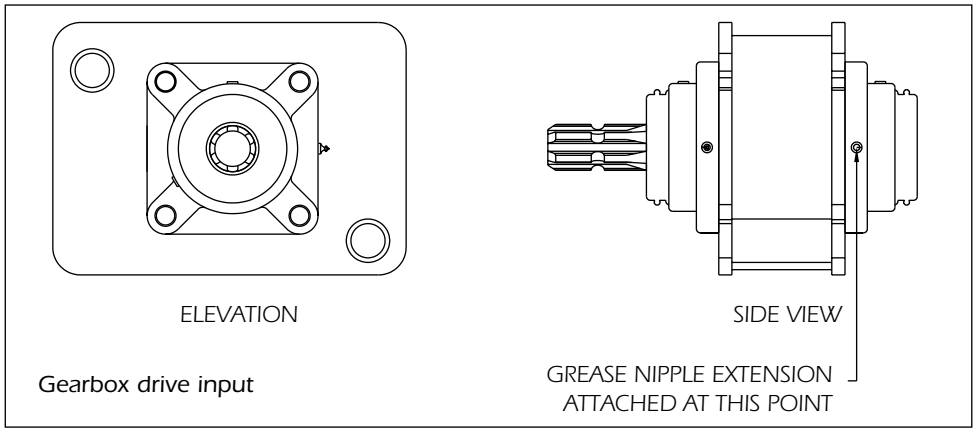

Maintenance Of Elevators

An elevator system requires regular maintenance in order to achieve optimum performance.

Every week the elevator needs to be checked to make sure that the belt is running straight and not wearing unevenly on one side. If the belt is not running straight then adjust the tension by tightening the tensioner nut on the side and run again to check.

The elevator surface needs to be kept clean at all times in order to avoid feed building up and falling into the rollers during operation. Do not allow old feed to build up on the sides of the belt.

Each week ensure that all the bearings are greased as per sketch.

Ensure that the elevator is free moving in each direction sideways and there is no feed caught in the slideways.

Replace belts and side rubbers when they become worn otherwise elevator will not function properly.

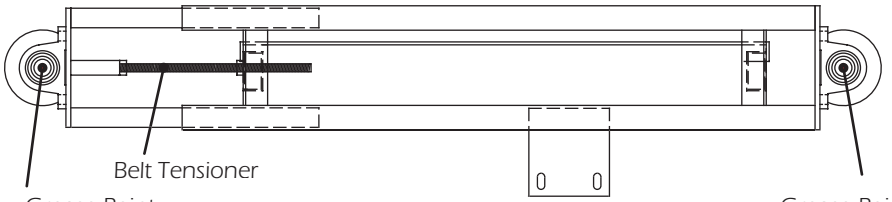

FRONT VIEW OF ELEVATOR

Shear bolt

The following are the recommended shear bolts to be used with the Klassik machine.

Machine type	Shaft	Shear bolt
FP80, 100,115	T50	M8 x 65 x 8.8
FP140	T60	M10 x 65 x 6.8
FP17S, 17L, 200	T60	M10 x 65 x 8.8
Planetary box	T50	M8 x 55 x 4.6

Note: When using reduction gearboxes, decrease shear bolt strength accordingly. When using dual speed gearboxes (Keenan), a special adapter unit, complete with an M5 x 30 x 4.6 shear bolt, is supplied to fit on the reduced speed shaft. ***As a rule when using a reduction planetry gearbox always use grade 4.6 shearbolt.***

Nuts and Bolts

1 After the first day, and every day thereafter, inspect wheel nuts.

2 After the first week, and each week thereafter, check all nuts and bolts, including bearing nuts, for tightness.

Torque

Stud Type	FT.LBS	N.M.
M18	250	337
M20	300	405
M22	400	540

Tyres

1 Each week check the tyres for wear and damage.

2 Each week check tyre pressures. Optimum tyre pressures are shown on left.

Maximum inflation pressures

When refitting and re-inflating tyre/wheel assemblies, a safety cage should be used to prevent possible injury. Incorrectly fitted tyres are dangerous. Please make sure tyre repairs are carried out by experienced tyre fitters.

This information is given as guidance. If in doubt please contact Keenan service.

Tyre	Bar	PSI
30 – 11.5 – 14.5	7	101
12.5/80 – 15.3	5.3	76
12.0 – 18	5	72
40 – 14	7	101
15/70 – 18	5	72
16/70 – 20	5.45	79
15 x 22.5 (385/65R – 22.5)	5	72
18 x 22.5 (445/65R – 22.5)	6	87
(285/70R – 19.5)	8	116
(275/70R – 22.5)	8	116
(400/60 – 15.5)	5	72
(385/65R/19.5)	5	72
(245/70/19.5)	8	116

Wheels

1 Each season, lever off hub cap, remove split pin and castle nut and remove hub.

2 Check seals, bearings, brake shoes, springs, studs and all other internal parts.

3 Replace worn parts, re-grease and refit.

Note: When re-fitting wheels, screw crown nut until resistance is felt (do not overtighten).

Turn hub for several revolutions to ensure it is completely bedded. Release crown nut 1/6 of a revolution, check for movement in hub, and if none, re-fit split pin.

For non standard wheels or any not specified on this list please contact Keenan for details of pressures.

Note: At the end of the feeding season wash the machine down thoroughly preferably using a power washer. Grease or oil all lubrication points and open the draincock.

8 Maintenance checklist

Daily

Cleaning: Clean all old feed from around body to prevent corrosion.

Guillotine door: Before using the machine, check that the door opens and shuts fully and operates smoothly.

Weekly (40 hrs)

PTO input shaft: Grease the universal joints (2 nipples) and the sliding half shafts (smear grease on surfaces).

Drive (gear) box: Grease the drive input-shaft bearings (2 nipples).

Mixing paddle door: Grease the front and rear mixer-paddle shaft end-bearings (2 nipples).

Feed discharge auger: Grease the auger's rear shaft end-bearing (1 nipple). (NB the auger shaft's front end-bearing is sealed and does not need routine lubrication but should be checked annually for wear).

Tandem Axle: All tandem axles are fitted with grease nipple extensions to avoid having to climb underneath machine to grease these points. These extensions are located on top of the chassis underneath the body of the feeder and between the wheels at each side. (see sketch page 20) These must be greased weekly. As with all extensions please ensure that the hoses are in good condition as if not grease will leak out and not get to where it is needed.

Elevator: Each week grease the bearings at each end of the elevator belts. There are 2 on each side of the elevator - as per sketch. (4 nipples in total) and check elevator belt for cracks or tears.

Guillotine door: Grease the door hydraulic cylinders (4 nipples) and the slide plates (smear grease on surfaces).

Drive chains: Apply universal-type oil liberally. Check both chain tensioners are adjusted correctly (see text).

Tyres: Check that tyres are inflated at the recommended pressures and wheel nuts are tight.

Yearly (end of season)

Drive chains: Remove both chains; wash off all dirt and old oil, using paraffin, then dry. Soak both chains in oil overnight; or longer, if possible.

Machine: Before storage, wash the complete machine, then grease or oil all weekly lubrication points as above. Open the draincock in the mixing hopper. Check tyre pressures. Store the machine under cover or under a tarpaulin, if possible.

Electronic indicator: If the machine is to be stored, remove the indicator unit from the machine and keep in a dry place. Lightly grease the load cell cable connector end, then protect it with a plastic bag or tape.

Wheels: Remove and inspect hub units. Replace worn parts, regrease and re-fit.

Blades; Blades will have to be kept sharpened. This will have to be done without taking the temper (over heating) from the blades. If the machine is operated with blunt blades it will cause major stress on the drive system. Blades may have to be replaced when it is not practical to sharpen them.

Due to the hazards involved in entering the mixing chamber it is recommended that all blade replacement is carried out only by a Keenan Authorised service agent who is specially trained to do this.
Contact your local agent (see back cover for details).

9 Warning signs

Do not open or remove safety guards while the feeder is connected to the tractor

Keep a safe distance from this machine

Stay clear of sharp blade

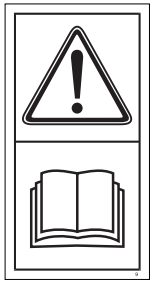

Read the operators manual

Do not stand on the ladder while the machine is working

Lift to open

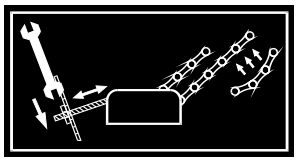

Chain adjuster

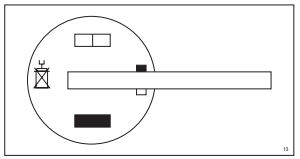

Air brake positions

10 Standard specifications

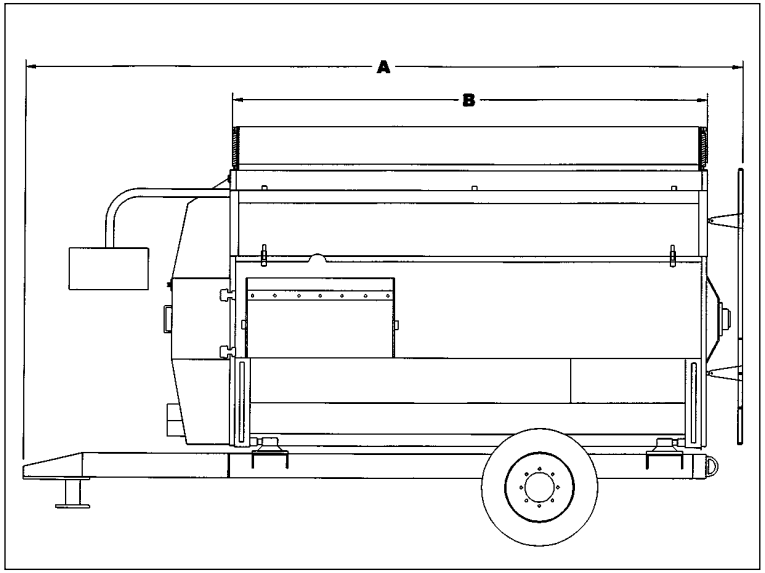

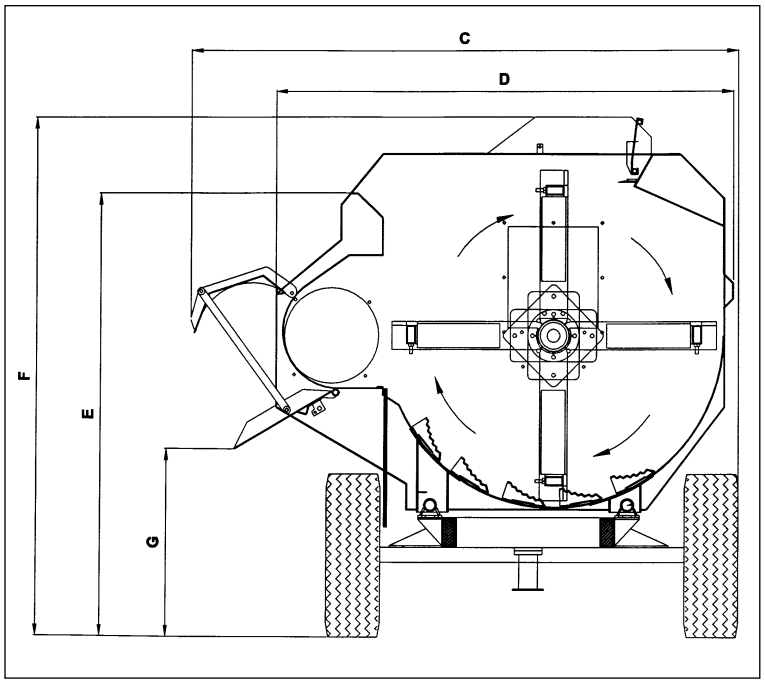

A Overall length
B length of mix chamber
C minimum operating width
D width of body
E loading height
F Overall height
G Feedout height

MODEL	90	80	11.5	100	140	170	200
A	6.06 M 238.5"	5.06 M 199"	6.06 M 238.5"	5.06 M 199"	6.06 M 238.5"	6.06 M 238.5"	7.06 M 278"
B	4.0 M 157.5"	3.0 M 118"	4.0 M 157.5"	3.0 M 118"	4.0 M 157.5"	4.0 M 157.5"	5.0 M 196.75"
C	2.4 M 94.5"	2.6 M 102.5"	2.6 M 102.5"	2.75 M 108"	2.75 M 108"	3.1M 122"	3.1M 122"
D	2.1 M 82.5"	2.3 M 90.5"	2.3 M 90.5"	2.54 M 100"	2.54 M 100"	2.85 M 112"	2.85 M 112"
E	2.19 M 86"	2.30 M 90.5"	2.34 M 92"	2.46 M 97"	2.60 M 102.5"	2.81 M 110.5"	2.87 M 113"
F	2.54 M 100"	2.65 M 104.5"	2.69 M 106"	2.81 M 111"	2.95 M 116.5"	3.15 M 117.5"	3.25 M 120"
G	0.99 M 39"	0.96 M 38"	1.01 M 39.5"	0.99M 39"	1.13 M 44.5"	1.3 M 51"	1.38 M 54.25"
Capacity	$9.0M^3$ $315ft^3$	$8.0M^3$ $280ft^3$	$11.5M^3$ $400ft^3$	$10.0M^3$ $350ft^3$	$14.0M^3$ $500ft^3$	$17M^3$ $600ft^3$	$20M^3$ $700ft^3$
Weigher resolution Kg lbs	5 10	5 10	5 10	5 10	5 10	5 10	5 10
Discharge	Standard Feedout	Standard Feedout	Standard Feedout	Standard Feedout	Standard Feedout	Standard Feedout	Standard Feedout
Wheels	6 STUD 12/18 14 PLY	6 STUD 12/18 14 PLY	6 STUD 12/18Y 14 PLY	6 STUD 12/18 14 PLY	8 STUD 385 65 R 22.5	10 STUD 385/65 R 19.5	10 STUD 385/65 R 22.5
Unladen Weight Kg lbs	4750 10,463	4600 10,132	5000 11,013	4800 10,573	5400 11,894	7200 15,859	8500 18,722

Note:
NOTE: Tray Height G is with the Mechanical adjuster on tray - 75 mm (3") can be added to this height if the Hyraulic Ram on tray is fitted.
Particular specification will differ from above and may be customised for each country - Refer to sales brochure for specific dimensions
Overall height includes 200 mm (8") for creel.

11 Part numbers

Item & Description	80	100	115	140	170	200
1 Main Sprocket	EF807/34	EF107/34	EF807/34	EF107/34	EF207/34	EF207/34
2 Bearing (rotor front)	P501	P501	P501	P501	P517	P517
3 Bearing (auger front)	P503	P503	P503	P503	P516	P516
4 Sprocket & Spline Shaft	EF1018/11	EF1018/11	EF1018/11	EF1018/11	EF2018/16	EF2018/16
5 Sprocket (auger feed)	EF809/32	EF109/32	EF809/32	EF109/32	EF209/32	EF209/32
6 Sprocket (11 tooth)	EF109/29	EF109/29	EF109/29	EF109/29	EF209/29	EF209/29
7 Front Cross Member	EF8017	EF1017	EF8017	EF1017	EF2017	EF2017
8 Gearbox (Unit)	EF1018	EF1018	EF1018	EF1018	EF2018	EF2018
9 Bottom Jockey (complete unit)	EF1015	EF1015	EF1015	EF1015	EF1015	EF1015
10 Top Jockey (complete unit)	EF1014	EF1014	EF1014	EF1014	EF1014	EF1014
11 Gearbox Adjuster (Unit)	EF1018/15	EF1018/15	EF1018/15	EF1018/15	EF2018/15	EF2018/15
12 Read Out Arm (unit)	EF102/60	EF102/60	EF102/60	EF102/60	EF202/60	EF202/60
13 Chain primary	P703	P703	P703	P703	P702	P702
14 Chain secondary	P701	P701	P701	P701	P708	P708

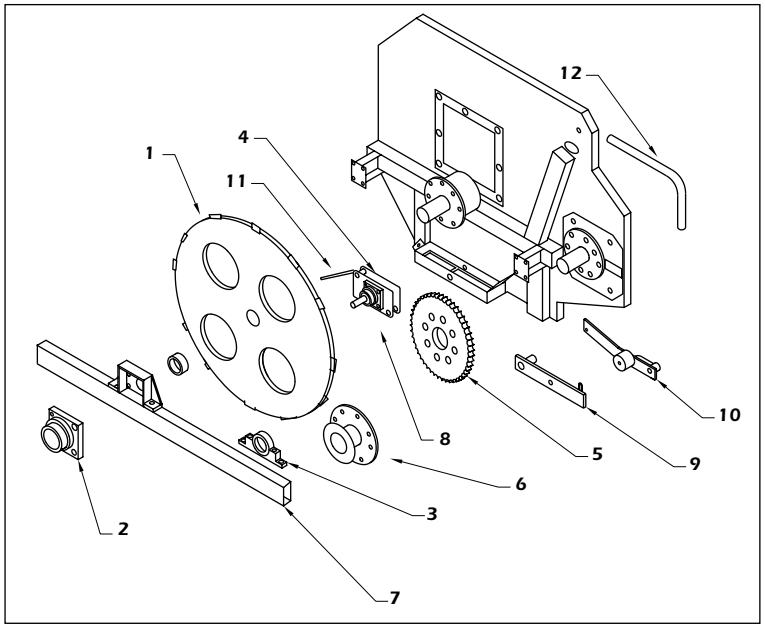

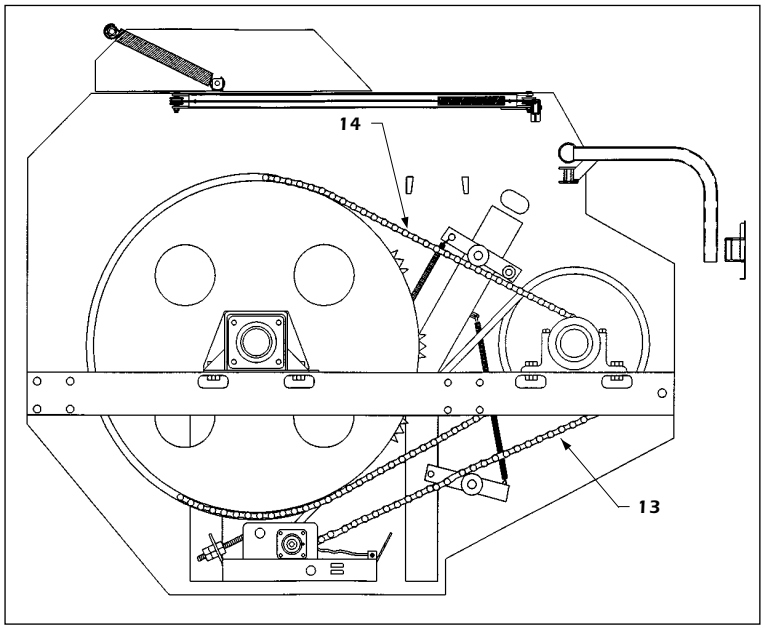

Item & Description	80	100	115	140	170	200
15 Front Rotor Stub Shaft	EF107/7	EF107/7	EF107/7	EF147/7	EF207/7	EF207/7
16 Paddle Flange (outer)	EF107/3	EF107/3	EF107/3	EF147/3	EF147/3	EF147/3
17 Paddle Flange (inner)	EF107/2	EF107/2	EF107/2	EF147/2	EF147/2	EF147/2
18 Paddle Rubber	FP108/28	FP108/28	FP148/28	FP148/30	FP148/30	FP208/28
19 Paddle Rubber Retainer	FP108/22	FP108/22	FP148/22	FP148/22	FP148/22	FP208/22
20 Rotor Unit	EF107	EF107	EF117	EF147	EF177	EF207
21 Rotor Seal Rubber	EF107/26	EF107/26	EF107/26	EF147/26	EF147/26	EF147/26
22 Rotor Seal Retainer	EF107/27	EF107/27	EF107/27	EF107/27	EF207/27	EF207/27
23 Paddle Block	EF107/16	EF107/16	EF117/16	EF147/16	EF207/16	EF207/16
24 Paddle Block	EF107/15	EF107/15	EF117/15	EF147/15	EF207/15	EF207/15
25 Auger Stub Shaft	EF109/10	EF109/10	EF109/10	EF109/10	EF209/10	EF209/10
26 End Creel	EF1014-9	EF1041-9	EF1041-9	EF1041-9	EF2041-9	EF2041-9
27 Main Creel	EF1041-10	EF1041-10	EF1441-10	EF1441-10	EF1741S10	EF2041-10
28 Top Knife	P330-3	P330-3	P330-3	P330-3	P330-3	P330-3
29 Auger seal rubber	EF106-71	EF106-71	EF106-71	EF106-71	EF206-71	EF206-71
30 Auger seal retainer	EF106-70	EF106-70	EF106-70	EF106-70	EF206-70	EF206-70
31 Rubber seal for body	RD104-23	RD104-23	RD144-23	RD144-23	RD144-23	RD204-23
32 Rubber seal retainer for body	RD104-24	RD104-24	RD144-24	RD144-24	RD144-24	RD204-24
33 Rubber seal for Auger top & bottom	RD106-23	RD106-23	RD146-23	RD146-23	RD146-23	RD206-23

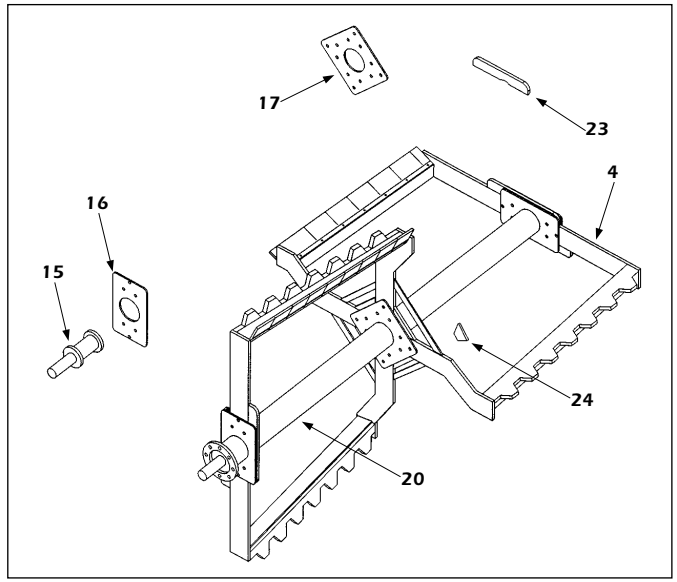

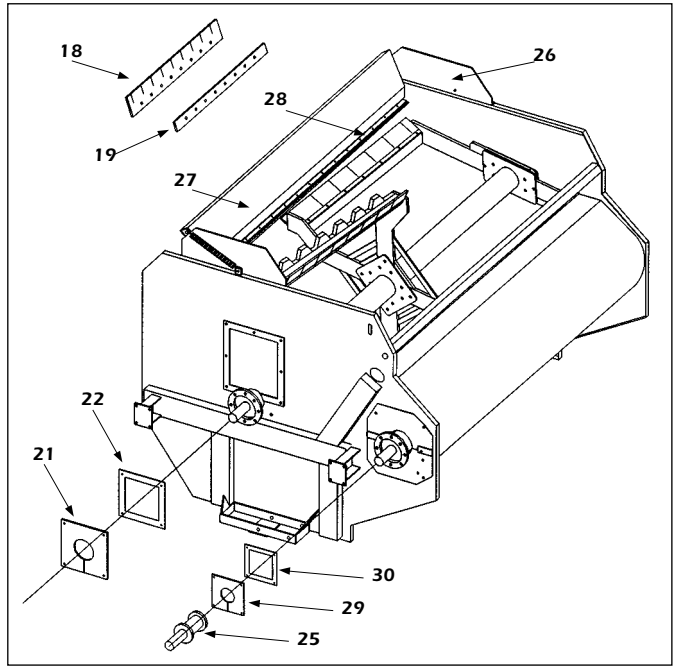

Item & Description	80	100	115	140	170	200
34 Rubber seal retainer for Auger top & bottom	RD106-24	RD106-24	RD146-24	RD146-24	RD146-24	RD206-24
35 Front & rear end seals	P661-5	P661-4	P661-5	P661-4	P661-4	P661-4
36 V.F.C. door bottom ram pin	RD101016	RD101016	RD101016	RD101016	RD101016	RD101016
37 Front ram (small)	P816	P815/1	P816	P815/1	P815/1	P815/1
38 Rear ram (big)	P816/1	P815	P816/1	P815	P815	P815
39 Blades in front body	P330-7	P330-7	P330-7	P330-7	P330-7	P330-7
40 Blades in rear body	P330-8	P330-8	P330-8	P330-8	P330-8	P330-8
41 Guillotine door V.F.C.	RD801040	RD101040	RD111040	RD141040	RD17104S	RD201040
42 Bolt on bottom ram bracket, front	RD101044	RD101044	RD101044	RD101044	RD101044	RD101044
43 Angled paddle with rubber for FP (rear)	CP808-31	CP108-31	CP118-31	CP148-31	CP178S31	CP208-31
44 Angled paddle no rubber for FP (rear)	CP808-32	CP108-32	CP118-32	CP148-32	CP178S32	CP208-32
45 Angled paddle with rubber for FP (front)	CP808-33	CP108-33	CP118-33	CP148-33	CP178S33	CP208-33
46 Angled paddle no rubber for FP (front)	CP808-34	CP108-34	CP118-34	CP148-34	CP178S34	CP208-34
47 Indicator for V.F.C. door	RD101050	RD101050	RD101050	RD101050	RD101050	RD101050
48 Front & rear seal retainer	RD802-103	RD102-103	RD802-103	RD102-103	RD102-103	RD102-103
49 Bolt on bottom ram bracket, front	RD101045	RD101045	RD101045	RD101045	RD101045	RD101045

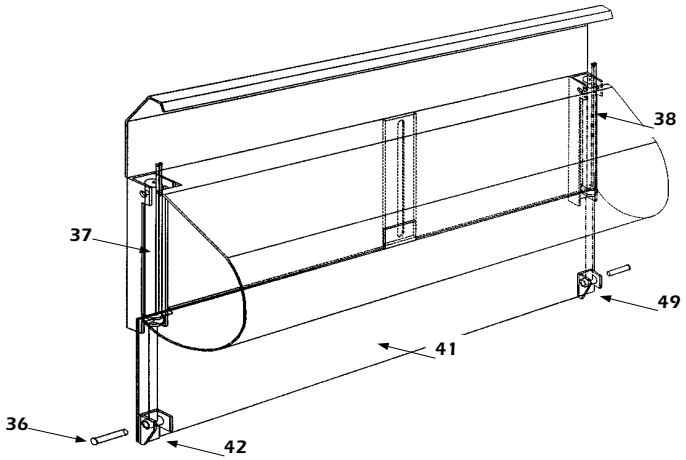

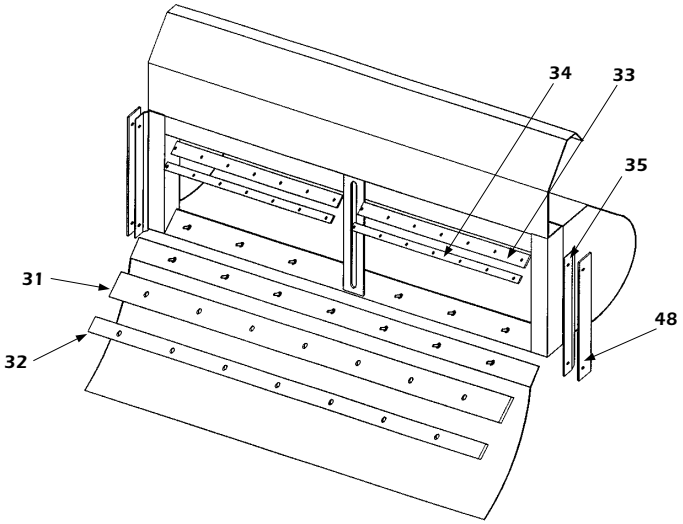

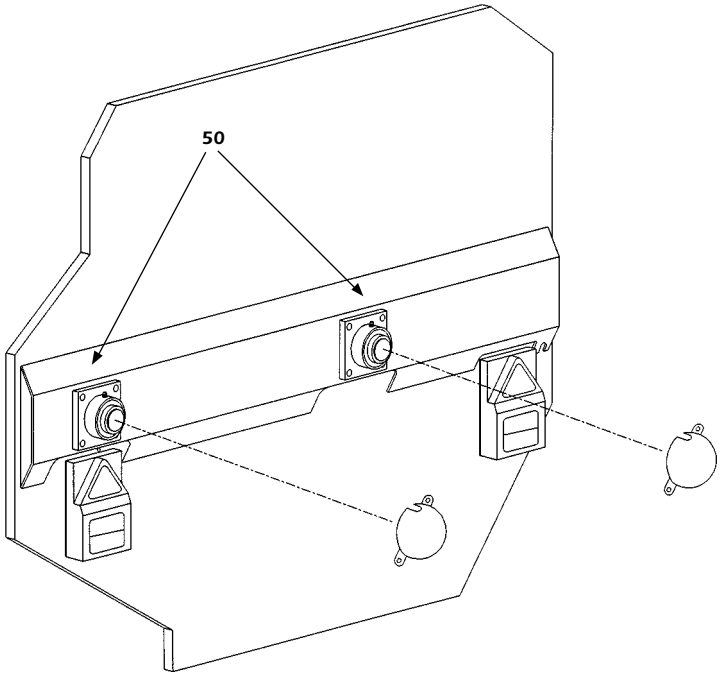

Item & Description	80	100	115	140	170	200
50 Bearing	P506	P506	P506	P501	P517	P517

12 Troubleshooting Guide

Problem	Solution
1 Weigh display will not work properly	Check section on weighing section in manual.
2 VFC door does not move	Check hydraulic hoses and that valves are open.
	Check tractor hydraulic oil level.
	Check ram condition and pins are secure.
3 VFC door drops during mixing	Insufficient hydraulic pressure - check spool valve on tractor or fit non return valve in line.
	Check ram for signs of leakage.
4 Excessive shearbolt breakage	Machine overloaded.
	Driving chain too loose - check condition and adjust.
	Feedout too fast - open feed out door slowly at first then open fully.
	Turn paddle a few turns before opening feedout door to avoid huge load on machine - especially after feed has settled in body of machine.
	Run machine slower.
	Never load bales directly down on paddle in one go - always chop up into at least 4 pieces.
5 Noisy operation	Oil chains liberally - adjust tension on chains.
	Grease all nipples.
6 Feed is not mixed properly	Insufficient mixing time.
	Loading materials in wrong order.
	Not enough time given for chopping
	Overloading of machine.
7 Feedout is too slow	Check condition of paddle rubbers
	Slow down tractor ground speed.
	Reduce engine revs to give paddle more time to push material into auger
8 Horsepower requirement is too high	Check chopping blades and top knife for sharpness.
9 Machine not chopping fast enough	Blades blunt.
	Not enough material in body - not heavy enough - try adding more material or in case of hay/ straw add water or a fork of silage to weigh it down

13 Warranty

Richard Keenan & Co. shall undertake to correct by repair or replacement, at the companies option, any defect of material or workmanship, which occurs within the first 12 months after the date of commissioning, post-sale.

The warranty shall not apply to:

A Machines used by a third party, who will not have had instruction in the correct use of the machines by an official company representative.

B Machines which have sustained damage through general wear and tear, neglect or use, for which the machines were not intended.

C Bearings, sprockets, chains, flywheel & components thereof, breaker tines, hammers and other wearing parts unless evidence of immediate working failure can be furnished.

D Any consumable or perishable parts such as knives, blades, rubber seals, hydraulic components, shear-bolts, brake liners, electric components and running gear, unless evidence of immediate working failure can be furnished.

E Any machine on which the identification marks have been removed or altered.

F Any machine that has not received effective routine maintenance using recommended Keenan products as laid down in the operatorís manual.

G Any machine that has received repairs or modifications by persons unauthorised by Richard Keenan & Co., which in the companiesí judgement has affected the performance or reliability of the machine.

H Any machines fitted with spurious or non-genuine spare parts and attachments.

I Machines damaged in transit, whilst being loaded or unloaded on premises other than those owned by Richard Keenan & Co.

J Parts, which may be defective or may have failed, must be retained on site pending further investigation, as they may need to be inspected in situ by a company representative.

The sole and exclusive claim against Richard Keenan & Co., made by the first or subsequent user, shall be for the repair or replacement of defective parts.

No other claim, including, but not limited to incidental, indirect or consequential damages for lost profits lost sales, injury, property loss or damage or any other loss sustained, shall be available.

Oral statements made by any person(s) including dealers and representatives of Richard Keenan & Co., which are inconsistent or conflicting with these conditions, shall not constitute warranties unless given in writing and signed by a Director of Richard Keenan & Co.

PRODUCT CHANGES AND IMPROVEMENTS

Due to our policy of continuous improvement, Richard Keenan & Co. reserve the right to make changes in design, to add improvements or to otherwise modify any of its products without incurring any obligation on products previously supplied.

In the event of the machine being loaned to or hired by a third party.

EC Declaration of Conformity according to Directive 89/392/EEC as amended

CE

Manufacturer

Richard Keenan & Co. Ltd.,
Borris,
Co. Carlow,
Ireland.

Certifies that the Keenan Klassik II complies with the essential safety requirements of the Directive 89/392/EEC as amended.

To conform to these essential health and safety requirements, the provisions of the following harmonised standards were particularly considered.

EN 292 - 1, 2, EN294, EN-16-T, EN 1152

BS 6792, ISO 11684.

Date: 1st June 2001

Signed: .....

Gerard Keenan, Managing Director.

Keenan SYSTEM

Better Farming – Better Food

Head Office
Richard Keenan & Company
Borris, Co. Carlow Ireland
Tel. 0503 71200 Fax. 0503 71227
Service pager: 01 2087852 email: info@keenantmr.com
website: www.keenantmr.com

UK Office
Richard Keenan (UK) Ltd
6th Street, N.A.C. Stoneleigh Park,
Kenilworth, Warwickshire CV8 2RL, England
Tel. 024 76698270 Fax. 024 76698273
Feedline: 024 76698270
24 hr Service: 024 76690903
Service fax: 02476698249
email: info@keenantmr.com

Australia Office
Keenan Pty
1/109 Breen Street Bendigo,
Victoria, 3550, Australia
Tel. 0354 42 3333 Fax. 03 54 41 3633
email: info@hitech.net.au

South Africa Office
Keenan SA
15 Morgan Street, Dan Pienaar
Bloemfontien, 9301, South Africa
Tel/Fax. 051 4365921
email: keenan@shisas.com

USA Office
Keenan USA Inc.
7000 E Genesee St, Building A, Lyndon Office Park
Fayetteville, N.Y. 13066 - 1159
Tel. 315 445 1648 Fax. 315 445 1868
Service pager: 1 888 255 0427
email: keenanusa@broadviewnet.net